emily_huai@hanbell.cn
ir@hanbell.cn

1. 021-51365368

2.

3.

4.

5. 2012

6.

7.

8.

9.

10.

11. 12

12.

13.

14.

15.

16.

17.

18.

19.

20.

1.

2.

3.

4.

5.

6.

7. 2013

8.

9.

10. (1)

1.

2.

3.

4.

5. EMC

6.

7. 2012 5.9%

8.

9.

10. -2013 15

11.

12.

13.

14. 212

15. ·

16. · Rapid-Torc

17. · Saltus-Werk

18. ·

19. HSW

20. 2013

21.

22. edwards

23.

24.

25.

1. 5

2.

3.

4.

5.

6. : ,

7. :

8. : ,2013

9. : ,

10. 2 1-6 -10% 20%

11. 13 1 : ,

12. : ,

13. 9

13.

12

1

23

2013

2013

20016

5.25% 28.14 9.87%

15.68%

20%-30%

19.7%

17.2%

AXIS

DaDaint

2013 4

2

1

2

3

4

http://www.chinahvacr.com/News/Class1/201304/News_3092335.shtml

3

215

10%

40% 50%

430

2013

10 2015

20%

http://www.chinahvacr.com/News/Class1/201304/News_3092330.shtml

4

10

20 /

http://www.chinahvacr.com/News/Class1/201304/News_3092301.shtml

5 2012

?

?

?

R22 2020

R22

R22 R22

R22

R22 R22

2012

14 9 CFCS( )

R22 2020

2020 R22 R22

R22 R22

CnH(2n+2)

R134a 16

R134a

R134a 16

R134a 25 R134a

HFC-134a

CFC-12 R12 R134a

R134a 1234YF

60 /

R32 R22

R410a

R410a

R410a

8000 R410a

5000 R410a R410a

R410a

600a

600a

600a

R290

3

R290

R290

R290

R290

R290

R290

R290

?

22.7kg 13.6kg 260g 210g

390g

22.7kg 13.6kg

http://www.chinahvacr.com/News/Class1/201304/News_3092298.shtml

6

2015

5 10

2000

2020

5000

2 3

http://www.chinahvacr.com/News/Class1/201304/News_3091953.shtml T

7

1200 1.3

1000

2013 3 7 2013

6

2011

17 10

40 50

35

2012 5 31

B2C

15 10

3

26 ( )

2013

2 7

http://www.chinahvacr.com/News/Class1/201304/News_3092108.shtml

8

;

3D 3D

SRF

16.5%

8-10

http://www.chinahvacr.com/News/Class1/201305/News_3092901.shtml

9

SHECCO -

SHECCO 8

SHECCO

2012 51%

50%

84% 0-5% 31%

2015 5% 48% 2020

5%

-

SHECCO

67%

63%

http://www.chinahvacr.com/News/Class1/201304/News_3092158.shtml

10

140

2009

09

28ETBT/F2 9.96 Tf9

3

1951

500 100

20

50

5 6

4 24

http://www.compressor.cn/News/scdt/2013/0328/68286.html

13

2012

2013-2017

2012

4627.62 6.72%

2011 4

20

1

2012

2011

2012 2013

2009 10% 2011 20% 2012

30%

2013-2017

2015

35%

2009 2010

2012

2012

2012

2012 2 2011

2012

2012

80%

2013-2017

2015

8370-8510 9000

35% 2015 3150

2

图1 2006-2012年我国工程机械行业市场规模及同比增速(单位：亿元，%)

图2 2007-2015年中国工程机械融资租赁规模及预测(单位：亿元，%)

2013 4 Top

14

140

2009

09

http://www.compressor.cn/News/hykx/2013/0325/68221.html

15

2012 1.4

1.5 2012 1-11

10080 10570

2012 1-11 2534.59

23.03% 1655.99 7.02%

31629.25 10kg 5080.59

2012 COP

COP 2.30W/W

COP 1.90W/W

20 90

60%

2013

2013 3 -

2013(www.appliance-expo.com) 5

1500

http://www.compressor.cn/News/hykx/2013/0325/68222.html

16

2012

(Ronnie Leten)

1.65 (1.6)

2012 905 (105)

12%

7%-8% GDP

280

16 236

5700

http://www.compressor.cn/News/scdt/2013/0326/68242.html

17

25 2012

3

10GW

0.45-0.5 /

2 16

2 22 7 13 / 13.7 /

5.38%

20 /

1

http://www.zkjsysb.ibicn.com/news/d797830.html

18

1 29

21GW 35GW

2012 10

80%

3-6

2011

2012

10%-15%

18 / 2008

300 /

LDK

75

23.75% 35.97%

30.66%

250% 30%

2012 9

120% 80%

2011 29.7GW

74% ;

204 73%

2012

2013

2013 2013

2014 2015 640 720 800

2000 7GW

10GW

http://www.zkjsysb.ibicn.com/news/d791609.html

19

20%~200%

-

;

15

15

(2)

C4 C5 C6

16

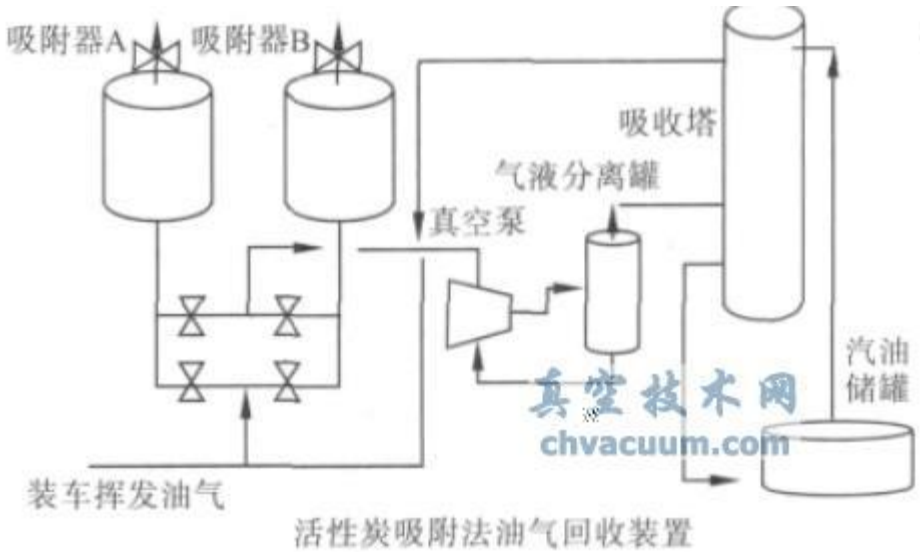

活性炭吸附法油气回收装置

16

80

;

( )

17

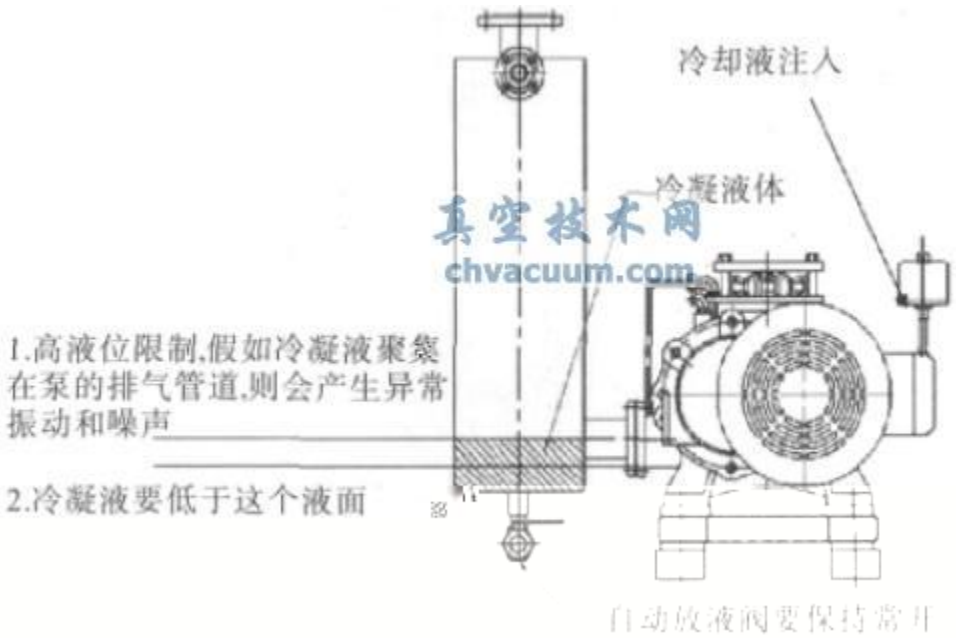

真空技术网
chvacuum.com

17

1 (

18)

Pa Pa

;

;

;

50

21 22

Tuthill (KMBD)

(Ni 0.076 mm+Cr 0.005 mm)

90

1

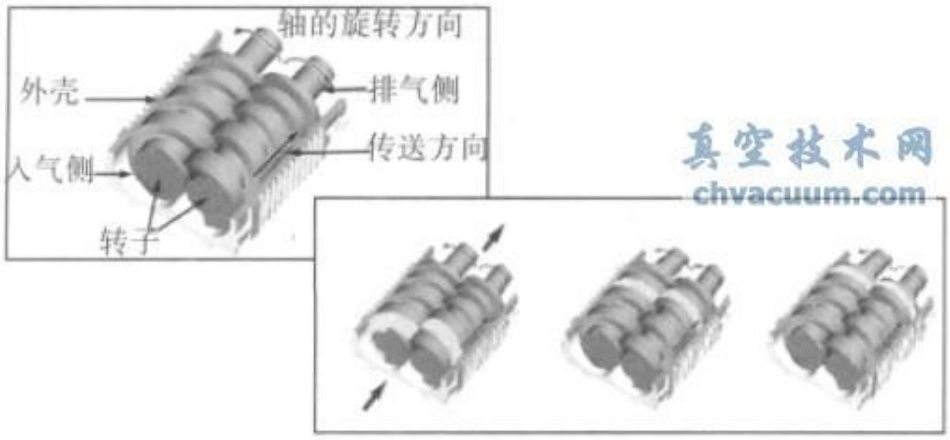

http://www.chvacuum.com/pumps/jixie/053191.html

1

(COP) 3.5 (1kW) 2.5 (2.5kW) 3.5kWt ( ) (COP-1)/COP=0.71 30%

1

2000 26 2010 43 2010

214782TJ/a 2005 5 2.45
19.7%; 35236MWt 5
2.29 18.0%
12kW 2010
294×104 2005 2 5.5kW
150kW
4000kW
2010 2009
5 1

TJ/a
×104
COP

1	47400100.05	253.5	
2	290352.114	363.0	3.8
3	2250030.05	203.5	
4	1640026.06	83.5	
5	1036817.88	123.5	

a)
, ;b)
36

25

2

21

2006

738×104m2 300×104m2

500×104m2 2007

1810×104m2 1500×104m2/a 2008

3585×104m2 2009 5462×104m2 2008

18% 330

2009

2007

1800×104m2 2008 2400×104m2 2009 3870×104m2

1.007×108m2 2010

10

10×104

2010 450

20

;

2010

3

60°

(45°)

1

4 120

15 9

4

80% 20%

30

4 2013

2004 2009

2013

2

2009 47400TJ29035TJ

2004 22214TJ6569TJ

5 25186TJ22466TJ

5 113%442%

5 14%30%

2004 2009

30% 14%

1 2010 3

3

14% 30%

201054036TJ37745TJ

201161601TJ49069TJ

201270225TJ63790TJ

201380057TJ82927TJ

201491265TJ107804TJ

2010 1.5×108m2 2009

49% 2010

43250TJ

2012

0.80 2013 0.80 2013

1.03 2014 1.18 2012

5

http://www.chinahvacr.com/News/Class1/201304/News_3091670.shtml

2

1800

6

2012 11

12 2013

1800

4 5

50%

6 5

http://www.chinahvacr.com/News/Class1/201303/News_3091477.shtml

3

1

2011 471564 9.2%

47712 4.5% 220592 10.6%

203260 8.9%

2011 13.9%

8.3% 17.4%

14.5% 18.4%

14.7%

2

1.

表1 螺杆、活塞式和离心式压缩机的性能对比

序号	性能对比指标	螺杆压缩机	活塞式压缩机	离心式压缩机
1	转速	转速高	转速低	转速高
2	压比	压比大，排气温度低，不会结炭	压比小，排气温度高，易结炭	压比较小，容易产生喘振
3	易损件	无吸排气阀，运转部件少	[illegible]	结构紧凑，易损件少
4	适用环境	可带液运行，在运转中可喷液（喷水、柴油）冷却，是多相压缩机，效率高	[illegible]，易液击，损坏机器，效率降低	[illegible]量，中低压，可满足化工流程高[illegible]但排气量的变化对机械效率影响很大
5	平衡性	吸排气连续，振动小，运转平稳	吸排气不连续，振动大	排气均匀、连续、无周期性脉动，工作平稳、振动小
7	可操作性	自动化程度较高，可操作性强	自动化程度低，操作复杂	[illegible]复杂，但可直接与驱动[illegible]实现自控
		维护维修频率低，	[illegible]	

3-40m3/min

3

FS

GHH IR

2

2006 6.6

30 10

2007 8.7 13

2008 11.5

52 17 2009

10.5 47

16 2010

13.8

62 20 2011

16.9 76

25

3-40m3/min

2015

35 50

20% 2

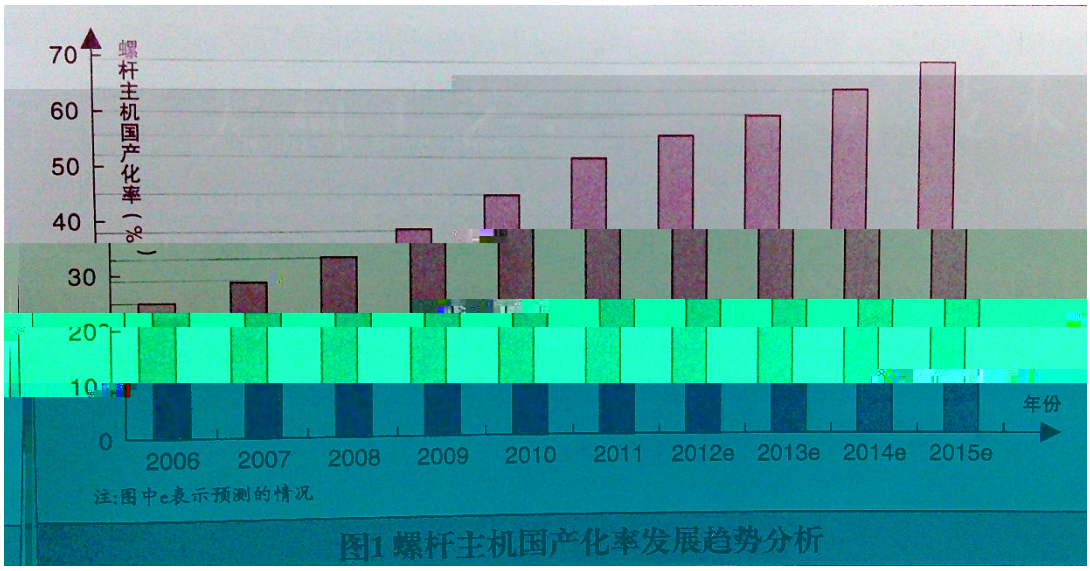

图1 螺杆主机国产化率发展趋势分析

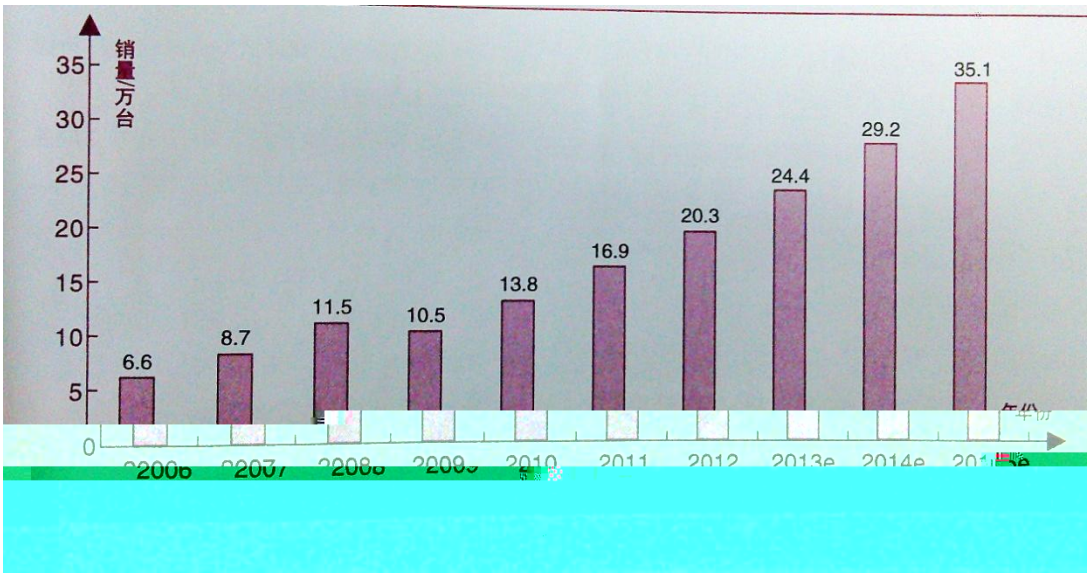

2013 4

4

1980 7 t

2000 14 t 2010 33 t

70%

3/4

1997

15

1990 5.2% 2005

19.1% SO_2 14.29% 12.45%

2008 CO_2

21.8%

51.3%

2020 64.5%

IEA 2009 11

15

15

20% 80%

33% 10%

2015 0.869t 2005

2010 1.034t 16%

6.7 t

10%

40%

500	34.5%	6.4%

2013 4

5

2012 40

/ /

/ /

30%

60% 40% 86% 7%

2% 5%

2004 11

2020

2009 GB19153-2009

/ 1 2 3

1-2

100% /

40%

40%

1/8

22KW

60% 40% 8000

108864kw.h

60% /40%	3	2	1	

22kw kw.h	188698	175104	156672	131328
%	42.3%	37.8%	30.5%	17.1%

22kw 500kg

300kg

200kg 40%

500 22kw

500kg

2011 22kw 20000

500 20000

300 8000

22kw-250kw 80%

PC

/ /

2013 5

6

20

elling 1903

20

60 , 1

0.080

20 50

70% 75%

20 70

80% 85% 90

90%

90% 92%

92%

100%

90% 92%

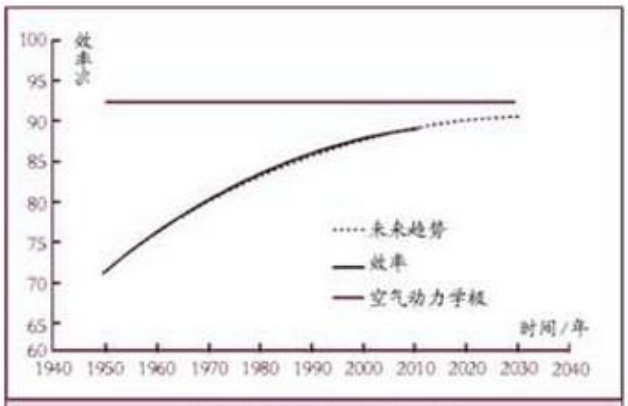

图1 效率发展过程

a

b c

5% 10%

0.1% 0.5% 1%

20

15.25mm

2

>0.040

3

U_{1X}

U_{1S} U_{1H} 3

C_{mx}

C_{1s} C_{1M} C_{1H}[4] U_{1x} C_{1x}

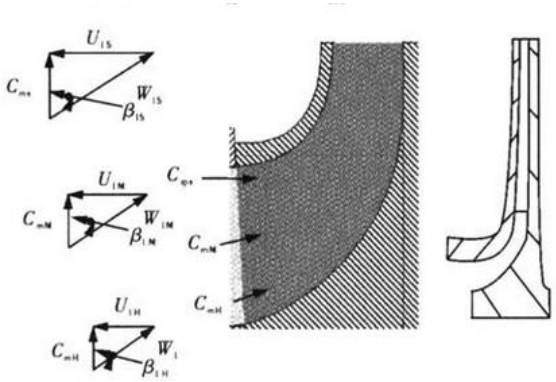

图 3 叶轮进口子午面速度分布

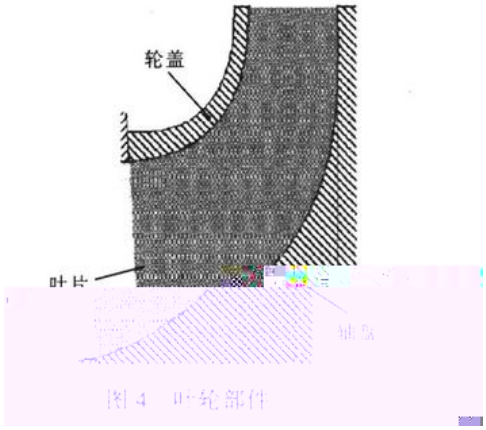

图 4 叶轮部件

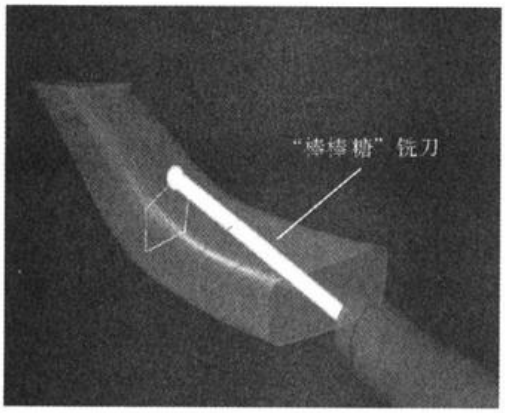

图 5 单件铣制过程中应

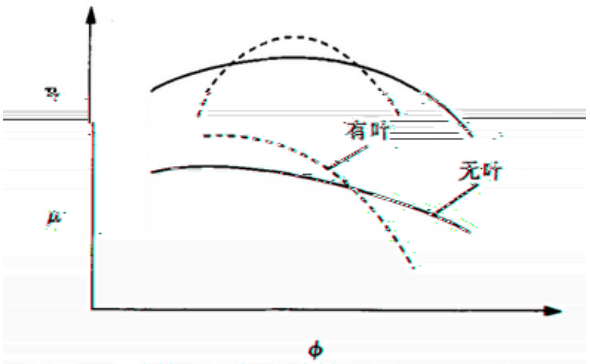

图 6 有叶扩压器与无叶扩压器的性能特性对比

4

5

0.040 D_2 381mm

15mm

0.025mm-0.075mm

20 90 EBrazeTM

EDM

ECM

6

50%

7

CP, 75%-80%

20 80

LSD

8

0.080 0.030

9 20

70

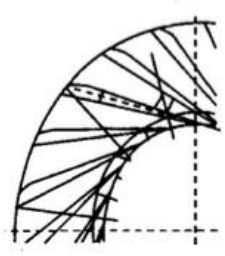

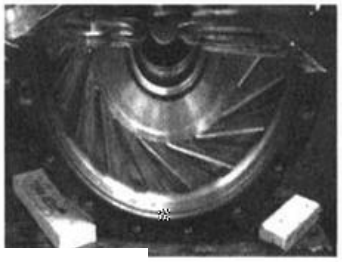

7

图 8 低稠度叶片扩压器(LSD)

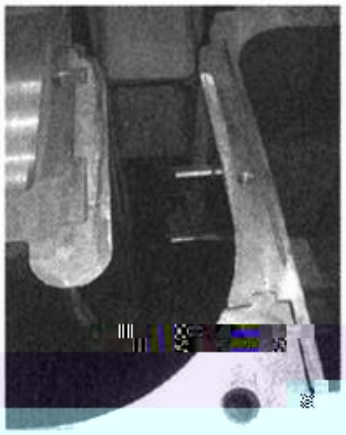

图 9 拱肋扩压器

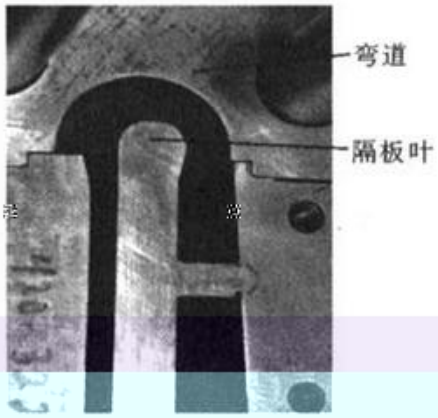

图 10 铸造隔板与铸造弯道的不对

10

2000

/ 20 50

1

20 50

2

20 50

11

3

CFD

20 80

20 90

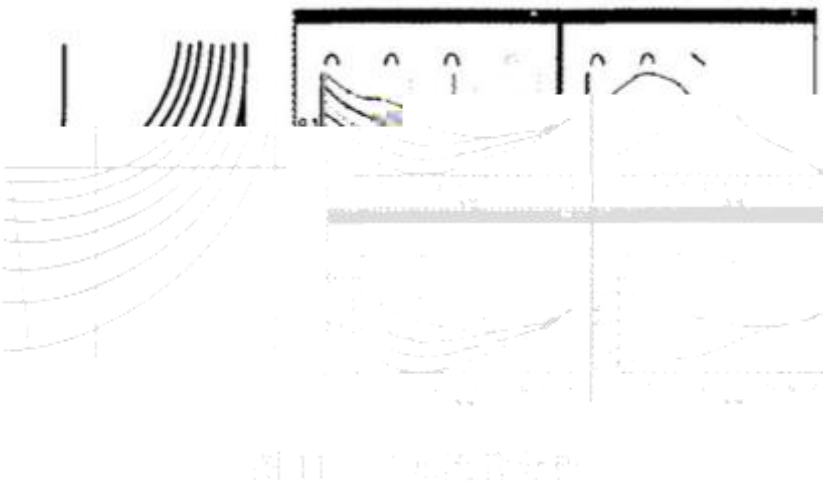

2013 5

7 2013

2012 16.17 18.43%

2.96 0.72%

2012

30% 2013

2013-2017

;

2013-2017

2000

2013-2017

2013-2017

;

;

2013-2017

500

600

2013-2017

;

http://www.compressor.cn/News/hykx/2013/0420/68593.html

Tin

150 500

2 10

1

20 80 Coffin DO

20 80 1988 Morishita E

200 L /min

12% 40% Morishita E

1990 Kushiro T 600 L /min

5 × 10-3 Torr(Torr Pa

http://www.chvacuum.com/tools/pressure.php)

Kushiro T

1998 Sawada T

2001

2.2

2.2.1

( ) (

)

2.2.2

2.2.3

(1)

(2)

360 °

(3)

(4)

(5)

2.3

5 :

:

180 °

:

:

: 180 °

: 1500 r /min

2.4

:

: ; : ;

: ;

:

3

3.1

3.2

1

2

1

3.3

4

4.1

(1) ULVAC :

DIS DVS DVT DSR DIS

DVS DVS

DIS

90 /

(2) Leybold : Leybold

(3) Busch : Busch 2001

Busch

Bucsh

2 3

(4) BOC Edwards : BOC Edwards 20 90

40 50

60 70Hz 2 3

BOC 100 /

(5) Varian : Varian 1998

:

5.5 ×104 Pa; 5.5 ×104 Pa

( )

Varian

10

1.

2.

103 Pa 0

6.3

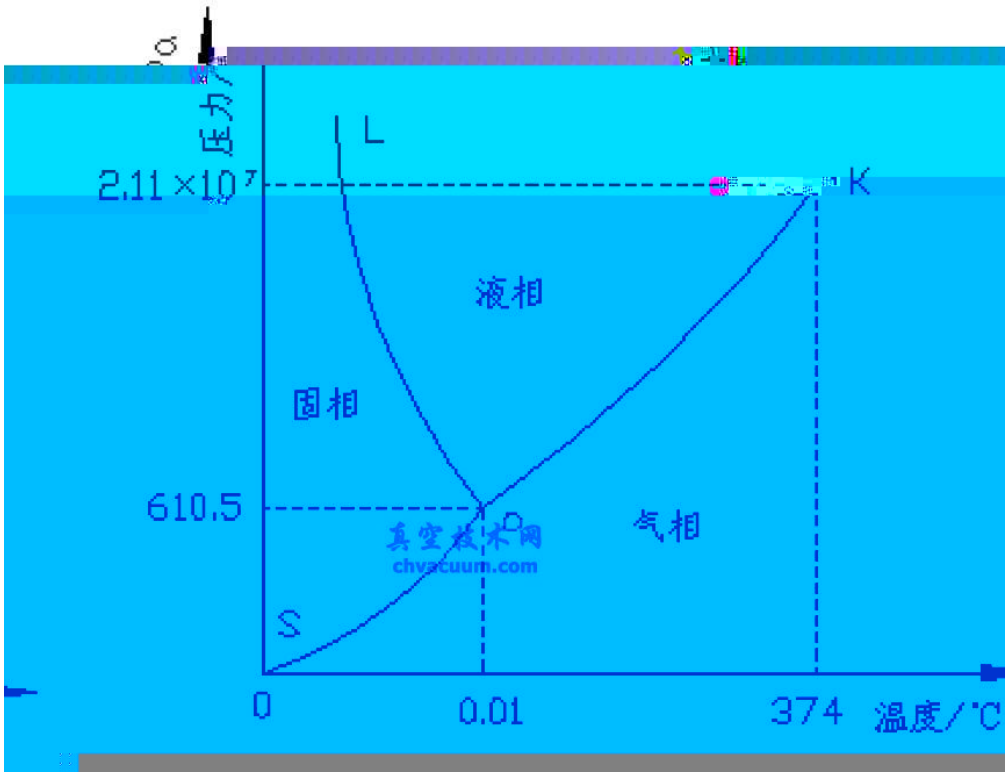

OS,OL OK

OS

OL

OK K K 374

2.11×107Pa O

0.01 610.5Pa

3.

1.

2.

3.

4.

5.

4.

4.1

1930 Flosdorf

1940 Fikidd chvacuum.com

1961 Aberdeen

,

,

,1963

11 , 25 1965 50 1972 ,

41 , 49 , 13

, ,1963 5000 ,1970 157000
,1972 175000
, , 150 1985 25 1989 10
17 (ICL)

,

, 40% 50% ,
20 , 10 35
, 13 10%

1967
Sandall (URIF),
1968 Dyer ,
1979
Litchield , ,

1943 ,
, 0.1m2

; ;

, ;

; ,

Atlas Atlas

, ,

,

8 2010

8 30 2013 100

40 150

2013

http://www.chinahvacr.com/News/Class9/201305/News_3093089.shtml

2.

5 13

77% ( )

38% 100%

2012 12 31 93496 16262

2012 36871 2862 2012

12 31 111545 24483

2012 94064.5 7144

http://www.chinahvacr.com/News/Class9/201305/News_3092914.shtml

3.

2013 4

7.11

17%

(3.83,-0.05,-1.29%)

7.11

17%

19

http://www.chinahvacr.com/News/Class9/201305/News_3092954.shtml

4.

NH3/CO2

R22

http://www.chinahvacr.com/News/Class9/201305/News_3092891.shtml

7. 2012 5.9%

5 9 8 2012

5.9% 435 27

5.9% 12,909

3

2013

17,600 50% 640

http://www.chinahvacr.com/News/Class9/201305/News_3092602.shtml

8.

2013 4 11

SCCA

SCCA

2012 ,

, 1.2

, ,

,

, ,

2012 ,

,2013 BOO

BOO ,

EPC

, ,

,

,

,

http://www.compressor.cn/News/hykx/2013/0526/69081.html

10. -2013 15

, 2013 5 14

VOGEL PROCESS

1998~2013

1998~2013

15

PROCESS

PROCESS 1998

300

15

11.

2 25

-- Chena Power Bernie Karl

Bernie Karl Chena Power

ORC KE400-66W-2-60

KE400-66W-2-60 400KW

66 60HZ Bernie Karl

ORC

1 Chena Power

Chena Power

40000KW

http://www.compressor.cn/News/hykx/2013/0307/67974.html

12.

,

0

6 21 28488

13.5 MW 440 /

2007 6 20

2006 5 40

http://www.compressor.cn/News/hykx/2013/0325/68223.html

13.

50% 2005 -2010

2012 1-12 6018.34

0.59%

2005

8 2012 7

12

http://www.compressor.cn/News/scdt/2013/0402/68346.html

14. 212

212

212

1 1:1

2 82±2dB

24%

http://www.compressor.cn/News/qyzc/2013/0523/69058.html

16. · Rapid-Torc

2013 4 23

Rapid-Torc

Rapid-Torc

30 2012 1100 7500

2013 3 12 Rapid-Torc

http://www.compressor.cn/News/qyzc/2013/0509/68854.html

17. · Saltus-Werk

2013 5 2

Saltus-Werk Max Forst GmbH

Saltus	1919	65	2012	800

7000

HSW

2013

5 13 3 2013

5 14 4

5 20

2009

http://www.compressor.cn/News/qyzc/2013/0520/68993.html

20. 2013

2013 5 5 5 7

30,000

9 6 / 10

RPO EBR ALMIG TA

2012 50

2012 10000

TSA

EBS 2012

1000

http://www.compressor.cn/News/qyzc/2013/0523/69036.html

21.

3 1 9 /

50

/

0.68 0.53

5.6 4.8 2012 3 15

8.7 20 /

http://www.compressor.cn/News/hykx/2013/0306/67964.html

22.edwards

http://www.eccn.com/news_2013052111371178.htm

23.

http://www.zkjsysb.ibicn.com/news/d830541.html

24.

http://www.zkjsysb.ibicn.com/news/d834360.html

25.

http://www.zkjsysb.ibicn.com/news/d783691.html

1. 5

http://stock.stockstar.com/SS2013030700000787.shtml

2.

http://www.cs.com.cn/gppd/scyj/201303/t20130309_3891691.html

3.

http://news.xinhuanet.com/yzyd/fortune/20130313/c_115001294.htm

4.

http://www.ihongpan.com/news/news_original.php?id=641246

5.

http://finance.china.com.cn/roll/20130322/1344730.shtml

6. : ,

http://finance.qq.com/a/20130325/004729.htm

7. :

http://finance.qq.com/a/20130325/006246.htm

8. : ,2013

http://ircs.p5w.net/ircs/ssgs/reportView.do?nyId=http%25253A%25252F%25252Fwww%25252Ecninfo%25252Ecom%25252Ecn%25252Ffinalpage%25252F2013%25252D03%25252D25%25252F1789480%25252Ehtml

9. : ,

http://ircs.p5w.net/ircs/ssgs/reportView.do?nyId=http%25253A%25252F%25252Fwww%25252Ecninfo%25252Ecom%25252Ecn%25252Ffinalpage%25252F2013%25252D03%25252D26%25252F1789797%25252Ehtml

10. 2 1-6 -10% 20%

http://finance.sina.com.cn/stock/t/20130415/162415153065.shtml

11. 13 1 : ,

http://finance.qq.com/a/20130416/003359.htm

12. : ,

13. 9

http://news.hexun.com/2013-04-02/152765451.html

15.

http://finance.sina.com.cn/360desktop/stock/gujiayidong/20130403/112915043142.shtml

16.

http://miit.ccidnet.com/art/32559/20130415/4866615_1.html

17. ( )

http://finance.china.com.cn/stock/hyyj/20130423/1412605.shtml

18. : ,

19. 13 1 : ,